FICARI®

Komi Round Dining Table

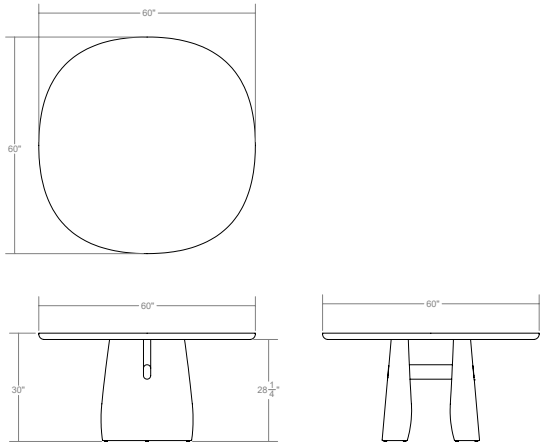

Customization
Available on request
Subject to review by Ficari

Product Dimensions
60” W x 60” D x 30” H

Net Weight
250lbs

Packaged Dimensions
66” x 66” x 36”

Packaged Weight
300lbs

Designer
Andrew Morson

Sustainability
Foam Free Packaging
FSC Hardwoods

Finishes
Available in Ficari standard wood finishes

Obsidian Oak Wenge Oak Graphite Oak Flint Oak Ivory Oak Dune Oak

@ficarihome